HP Latex Print and Cut Solution

Site Preparation Guide

© Copyright 2017 HP Development Company, L.P.

Edition 1

Legal notices

The information contained herein is subject to change without notice.

The only warranties for HP Products and services are set forth in the express warranty statement accompanying such products and services. Nothing herein should be construed as constituting an additional warranty. HP shall not be liable for technical or editorial errors or omissions contained herein.

Table of contents

1 Overview 1

Introduction 1

Documentation 1

Customer responsibility 1

Installation time schedule 2

2 Site preparation requirements 3

Physical space requirements 3

Unloading route 3

Environmental specifications 4

Ventilation and air conditioning 4

Designing the optimal print production area 5

RIP workstation characteristics 6

Networking 6

Printing supplies 7

Return the site preparation checklist 7

Electrical configuration 7

Single-phase power 7

Circuit breakers 7

Wall receptacles and power cords 8

Powerline disturbances 13

Grounding 13

3 Site preparation checklist 15

1 Overview

Introduction

Your equipment is supplied ready to use after a few simple installation procedures described in detail in the *Assembly instructions*. It is important to read the information provided in this guide thoroughly and to ensure complete compliance with all installation and operation requirements, safety procedures, warnings, cautions, and local regulations. A well prepared site helps to provide a smooth and easy installation.

Documentation

The following manuals are provided with your equipment, and can also be downloaded from http://www.hp.com/go/Latex300/manuals/.

- Introductory information
- Limited warranty
- Legal information
- Site preparation guide (this guide)
- Assembly instructions
- User guide

Customer responsibility

You are responsible for preparing the physical site for the installation of the equipment.

- Prepare the building's electrical system to meet the equipment's requirements and the Electrical Code requirements according to the local jurisdiction of the country where the equipment is installed. See Electrical configuration on page 7.

  NOTE: Make sure that a certified electrician reviews the setup and configuration of the electrical system used to power the equipment. See Electrical configuration on page 7.

- Meet temperature and humidity requirements and ensure proper ventilation for the equipment. See Environmental specifications on page 4.
- Meet all requirements for RIP, networking, and printing supplies. See RIP workstation characteristics on page 6, Networking on page 6, and Printing supplies on page 7.
- Prepare the unloading route so that the equipment can be unloaded and maneuvered into place. See Unloading route on page 3.

Installation time schedule

Allow a minimum of 4 hours for the installation. The installer may require the help of three people to perform certain tasks during installation.

2 Site preparation requirements

Physical space requirements

Unloading route

The route between the unloading area of the equipment and the installation site, including any corridors and doorways through which the equipment must be transported, is important to proper site preparation and must be checked before the arrival of the equipment. This pathway must be clear when the equipment arrives.

Printer and cutter physical specifications

	315 printer	335 printer	54-in cutter	64-in cutter
Width	2307 mm (90.8 in)	2561 mm (101 in)	1750 mm (68.9 in)	1980 mm (77.9 in)
Depth	840 mm (33.07 in)	840 mm (33.07 in)	680 mm (26.8 in)	680 mm (26.8 in)
Height	1380 mm (54.3 in)	1380 mm (54.3 in)	1145 mm (45.1 in)	1145 mm (45.1 in)
Weight	174 kg (383.6 lb)	188 kg (414.5 lb)	42 kg (92 lb)	54 kg (119 lb)
Width with packaging	2541 mm (100 in)	2795 mm (110 in)	1880 mm (74.0 in)	2110 mm (83.1 in)
Depth with packaging	765 mm (30.1 in)	765 mm (30.1 in)	480 mm (18.9 in)	480 mm (18.9 in)
Height with packaging	1239 mm (48.8 in)	1239 mm (48.8 in)	670 mm (26.4 in)	670 mm (26.4 in)
Weight with packaging	290 kg (639.3 lb)	304 kg (670.2 lb)	69 kg (152 lb)	78 kg (172 lb)

Doorways: minimum width 1.01 m (40 in) × minimum height 1.67 m (66 in) required.

The space required for assembly is 3 m (10 ft) in front and 1 m (3.5 ft) at the sides and rear.

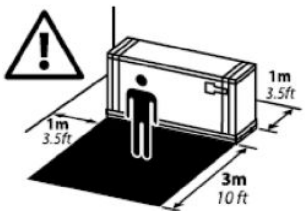

Most of the installation process requires one person, but four people are required to perform certain tasks.

Environmental specifications

These environmental conditions must be kept within the specified ranges to ensure the correct operation of the equipment. Failure to do so may cause print-quality problems or damage sensitive electronic components.

Printer environmental specifications

Relative humidity range for best print quality	40–60%, depending on substrate type
Relative humidity range for printing	20-80%, depending on substrate type
Temperature range for best print quality	20 to 25°C (68 to 77°F), depending on substrate type
Temperature range for printing	15 to 30°C (59 to 86°F)
Temperature range when not in operation	-25 to +55°C (-13 to +131°F)
Temperature gradient	no more than 10°C/h (18°F/h)
Maximum altitude when printing	3000 m (10000 ft)

NOTE: The printer must be kept indoors.

NOTE: If the printer or ink cartridges are moved from a cold location to a warm and humid location, water from the atmosphere can condensate on the printer parts and cartridges and can result in ink leaks and printer errors. In this case, HP recommends that you wait at least 3 hours before turning on the printer or installing the ink cartridges, to allow the condensate to evaporate.

In addition to controlling the temperature, humidity, and temperature gradient, there are other environmental conditions that must be met during site preparation.

- Do not install the printer where it will be exposed to direct sunlight or a strong light source.
- Do not install the printer in a dusty environment. Remove any accumulated dust before moving the printer into the area.

Cutter environmental specifications

	54-in cutter	64-in cutter
Environmental ranges		
Operating temperature	15 to 35°C (59 to 95°F)	15 to 35°C (59 to 95°F)
Relative humidity	35–75% , non condensing	35–75% , non-condensing
Storage temperature	–30 to 70°C (–22 to 158°F)	–30 to 70°C (–22 to 158°F)

Ventilation and air conditioning

As with all equipment installations, to maintain ambient comfort levels, air conditioning in the work area should take into account that the equipment produces heat. Typically, the printer's power dissipation is 2.6 kW (8.9 kBTU/h) for HP Latex 335 and 2.2 kW (7.5 kBTU/h) for HP Latex 315..

Special ventilation equipment (air filtration or air cleaner) is not required to meet U.S. OSHA requirements on occupational exposure to VOCs from water-based HP Latex Inks. Special ventilation equipment installation is at the discretion of the customer; however, fresh air ventilation is needed to maintain comfort levels.

For a more prescriptive approach to adequate ventilation, you could refer to the ANSI/ASHRAE (American Society of Heating, Refrigerating and Air-Conditioning Engineers) *62.1-2007 Ventilation for Acceptable Indoor Air Quality*.

The Safety Data Sheets for the consumables identify ink ingredients, and adequate ventilation needs to be provided to ensure that potential airborne exposures to these substances are adequately controlled.

You can obtain current Safety Data Sheets for the ink systems used in the printer from http://www.hp.com/go/msds.

Air conditioning and ventilation should meet with local environmental, health and safety (EHS) guidelines and regulations.

WARNING! The ventilation and air conditioning units should not blow air directly onto the equipment.

TIP: Maintaining positive air pressure in the print production room will help prevent dust from entering the room.

TIP: Consider to provide a minimum of 5 ACH* (air changes per hour) of fresh air ventilation and a minimum room volume of 30 m^3.

* Recommendation based on a 30 m^3 room with only one HP printer, if room volume changes or there are more printers in the room, the ventilation rate should be recalculated accordingly.

Designing the optimal print production area

You need enough space to perform the following tasks:

- Print
- Cut a substrate roll
- Service the equipment or replace components
- Ensure the equipment is well ventilated

Your equipment has the following dimensions:

Printer dimensions

	315 printer	335 printer
Width	2307 mm (90.8 in)	2561 mm (101 in)
Depth	840 mm (33.07 in)	840 mm (33.07 in)
Height	1380 mm (54.3 in)	1380 mm (54.3 in)

Cutter dimensions

	54-in cutter	64-in cutter
Width	1750 mm (68.9 in)	1980 mm (77.9 in)
Depth	680 mm (26.8 in)	680 mm (26.8 in)
Height	1145 mm (45.1 in)	1145 mm (45.1 in)

The space required for the printer is illustrated below (measurements in millimeters):

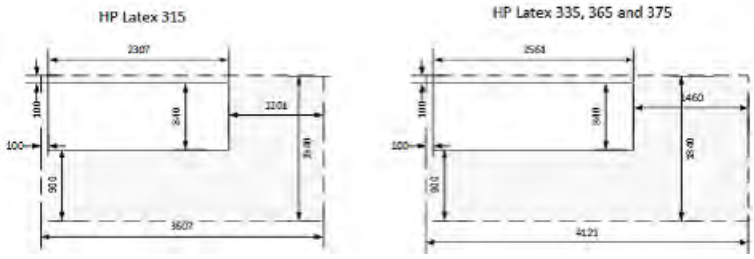

The space required for the cutter is illustrated below (measurements in millimeters):

54-in cutter

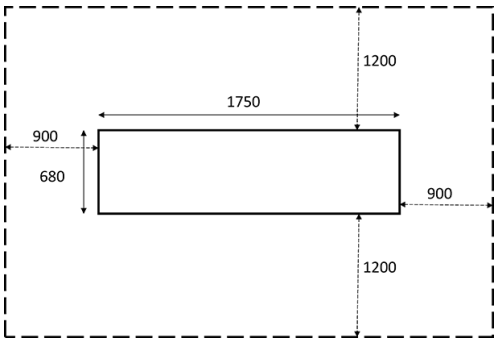

64-in cutter

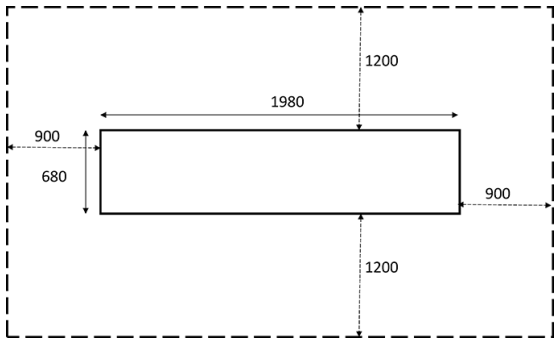

RIP workstation characteristics

Each RIP has specific requirements. Check with your RIP vendor to find out the requirements for the PC that you'll be using for the RIP station. See http://www.hp.com/go/latexrips for a complete list of certified RIP stations available for this printer. Make sure that the RIP station is fully functional and ready for installation.

Networking

You are responsible for all networking requirements, and you must complete the following tasks:

NOTE: In order to perform remote support, the printer must have access to the Internet using the LAN connection.

- Have a Gigabit Ethernet network ready for the day of installation.
- Provide two CAT-6 LAN cables to connect the equipment to your LAN and RIP workstation.
- Provide two Gigabit Ethernet switches.

To get the full features for your printer, it should be connected to the Internet. Most unmanaged networks are directly connected to the Internet. However, some networks require a web proxy. A proxy is a server that acts as an intermediary between computers on your local network and servers on the Internet. Before setting up the printer, please check if your network requires a web proxy.

To check this, open Internet Explorer or Safari on any computer within your network, and browse to http://hp.com. If you cannot connect to the site, your network does not have Internet access and you need to consult with your IT provider on how to configure Internet access. If you can connect to the site, you can check the browser settings for proxy configuration as follows:

- For Internet Explorer, go to **Tools** > **Internet options** > **Connections** > **LAN settings**. In the proxy server section of the window, if the **Use a proxy server** box is unchecked, you do not need a web proxy. If it is checked, make a note of the Address and Port settings in the main window, or in the HTTP part of the Advanced settings window.
- For Safari, go to **Preferences** > **Advanced** > **Proxies** > **Change settings**. If the **Web proxy (HTTP)** box is unchecked, you do not need a web proxy. If it is checked, make a note of the web proxy server name (before the ":") and port (after the ":").
- Proxy server names are typically similar to "proxy.mycompany.com" and proxy port is typically 80, but details are network dependent.

If you are unable to determine whether you need a web proxy or how to configure it, please consult with your network administrator or Internet Service Provider. When in doubt, you probably do not need a web proxy.

Printing supplies

The following supplies should be purchased in addition to the printer and should be available on the day of installation:

- Six HP 831 ink cartridges, one for each color: black, cyan, magenta, yellow, light cyan, and light magenta, and one HP 831 optimizer cartridge.
- At least one roll of substrate to perform calibrations and printhead alignment during printer setup.

Return the site preparation checklist

The checklist must be completed and returned to your reseller or service representative a minimum of two weeks before the day of installation.

NOTE: Any delays during installation that are caused by an unprepared site will be charged to the customer. Take care that your site is properly prepared to ensure a smooth and easy installation.

Electrical configuration

NOTE: If configuration of the building electrical system used to power the equipment needs to be modified to meet equipment requirements, an electrician is required. Make sure that your electrician is appropriately certified according to local regulations and supplied with all the information regarding the electrical configuration.

Your equipment requires the following electrical components to be supplied and installed by the customer, according to the Electrical Code requirements of the local jurisdiction of the country where the equipment is installed.

Single-phase power

Single-phase line specifications

	HP Latex 335		HP Latex 315		Cutter
	Printer	Curing	Printer	Curing	
Number of power cords	2		2		1
Input voltage	200–240 V ±10% (two wires and protective earth)				100–120 V ±10% or 200–240 V ±10%
Input frequency	50 / 60 Hz				
Maximum load current (per power cord)	3 A	16 A	3 A	13 A	2 A
Power consumption per power cord in printing mode	200 W	2.4 kW	200 W	2.0 kW	
Power consumption in ready mode	72 W		70 W		

Circuit breakers

NOTE: The circuit breakers must meet the requirements of the equipment and shall be in accordance with the Electrical Code requirements of the local jurisdiction of the country where the equipment is installed.

The printer requires two power cords that meet the following requirements.

Dedicated lines per SKU

	HP Latex 335		HP Latex 315	
	Printer	Curing	Printer	Curing
Dedicated line	Not required. Do not overload lines. See Single-phase power on page 7.	Yes	Not required. Do not overload lines. See Single-phase power on page 7.	Not required. Do not overload lines. See Single-phase power on page 7.
Branch circuit breaker	2 poles, 16 A/20 A according to local laws and printer maximum load current			
Residual current circuit breaker *	Recommended		Recommended	
	2 poles, 30 mA residual, at least 20 A capacity			

* Also known as Ground Fault Circuit Interrupter (GFCI)

Electrical configuration diagram (for reference only)

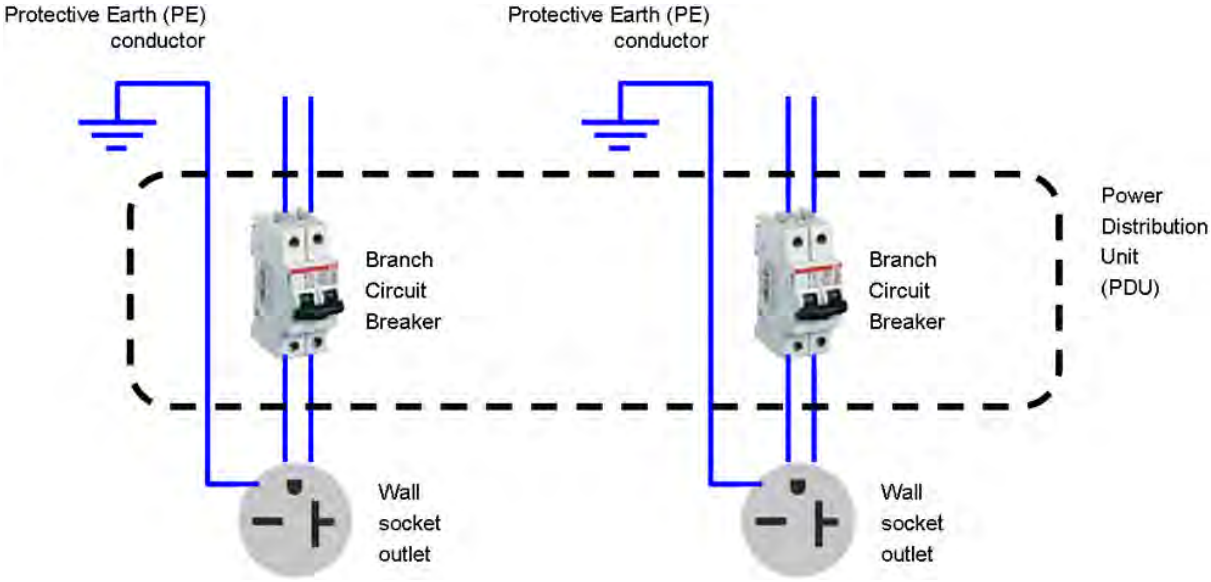

NOTE: The Power Distribution Unit (PDU) must be rated to meet the power requirements of the printer, and shall be in accordance with the Electrical Code requirements of the local jurisdiction of the country where the equipment is installed.

WARNING! Do not use a power strip (relocatable power tap) to connect both power cords.

Wall receptacles and power cords

Two power cords are provided with your printer, according to the printer's electrical specifications. If those cords do not reach your PDU and/or UPS, a certified electrician must install suitable extension cables on the day of installation.

To make sure you have the right wall socket outlets (wall receptacles) ready for installation, check the following:

1. The wall socket outlets must be suitable for **printer input ratings**. See Single-phase power on page 7.
2. The wall socket outlets must be suitable for the **power cord plug type** used in the country of installation. The tables below give examples of the power cords and the plugs provided with the printer according to the country. To make sure you have the right wall receptacle, find your country in the appropriate table and check the **plug type**.

⚠ WARNING! Use only use the power cord supplied by HP with the printer. Do not use a power strip (relocatable power tap) to connect both power cords. Do not damage, cut, or repair the power cord. With a damaged power cord, there is risk of fire and electric shock. Always replace a damaged power cord with an HP-approved power cord.

HP Latex 335 Printer—Power cord specifications by region

NOTE: You need two power cords.

Country	HP part number	Length	Plug type	Plug
USA, Canada, Mexico, Japan, Philippines, Thailand	8120-6893	4.5 m	NEMA 6-20P, 240 V, 20 A, non-locking	
International	8120-6897	4.5 m	IEC 60309, 240 V, 16 A, 2L +PE	

HP Latex 315 Printer—Power cord specifications by region

NOTE: You need two power cords.

Country	HP part number	Length	Plug type	Plug
America				
Argentina	8120-6897	4.5 m	IEC 60309, 240V, 16A, 2L +PE	
Brazil	8121-110	2.5 m	NBR 14136	
Chile, Uruguay	8121-0923	2.5 m	CEI 23-50	
USA, Canada, Mexico	8120-6360	2.5 m	NEMA 6-20P, 240 V, 20 A, non-locking	
Asia Pacific and Japan				
Australia/New Zealand	8120-6351	2.5 m	AS/NZS 3112-3 (15A)	
China	8121-0924	2.5 m	GB 1002 (16A)	

HP Latex 315 Printer—Power cord specifications by region (continued)

NOTE: You need two power cords.

Country	HP part number	Length	Plug type	Plug
Korea, Indonesia	8120-6352	2.5 m	CEE 7-VII	
India	8121-1074	2.5 m	IS 1293	
Taiwan	8121-1033	4.5 m	CNS 690	
Hong Kong, Singapore	8120–6898	4.5 m	BS 1363/A (13A fused)	
Japan, Philippines, Thailand	8120-6360	2.5 m	NEMA 6-20P, 240 V, 20 A, non-locking	
Europe, Middle East, and Africa				
Europe Russia	8120-6352	2.5 m	CEE 7-VII	
Denmark	8121-1077	2.5 m	DK 2-5A	
Israel	8121-1010	2.5 m	SI 32	
South Africa	8121-0915	2.5 m	SABS 164	
Switzerland, Liechtenstein	8120-6897	4.5 m	IEC 60309, 240 V, 16 A, 2L +PE	
U.K.	8120–6898	4.5 m	BS 1363/A (13A fused)	
Middle East	8120-6360	2.5 m	NEMA 6-20P, 240 V, 20 A, non-locking	

HP Latex Cutter—Power cord specifications by country

Country	Length	Plug type	Plug
Argentina	2.5 m	IRAM 2073	
Australia	2.5 m	AS/NZS 3112:2000	
Brazil	2.5 m	NBR 14136	
Cambodia, Indonesia, Korea, Vietnam	2.5 m	CEE 7-VII	
Chile, Uruguay	2.5 m	CEI 23-50	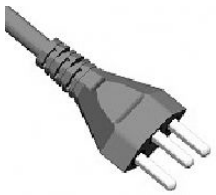
China	2.5 m	GB 1002	
Denmark	2.5 m	DK 2-5A	
EU, Russia	2.5 m	CEE 7-VII	

HP Latex Cutter—Power cord specifications by country (continued)

Country	Length	Plug type	Plug
India	2.5 m	SANS 164/1, IS 1292	
Israel	2.5 m	SI 32	
Japan	2.5 m	JIS C 8303	
Philippines, Thailand	2.5 m	NEMA 5-15P	
South Africa	2.5 m	SABS 164/1, IS 1292	
Switzerland	2.5 m	SEV 1011:2009, chapter 6534-2	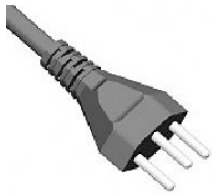
Taiwan	2.5 m	CNS 690 Type 2(1)	

HP Latex Cutter—Power cord specifications by country (continued)

Country	Length	Plug type	Plug
UK, Middle East, Hong Kong, Singapore	4.5 m	BS 1363/A (13A fused)	
USA, Canada, Mexico, Middle East (optional)	2.5 m	NEMA 5-15	

Appliance coupler (printer connection)

Country	Appliance coupler (power cable)	Appliance coupler inlet (printer)
All	Detachable terminal as per IEC60320-1 C19 (squared type) 	Detachable inlet as per IEC60320-1 C20 (squared type)

NOTE: Place the wall receptacle close enough to the printer so the plug can be plugged and unplugged easily.

Powerline disturbances

As with all computer and electronic equipment, reliable operation of your printer depends on the availability of relatively noise-free AC power.

- In order to ensure optimum performance and reliability, your printer should be protected from variations in line voltage. Lightning, line faults, or the switching of lighting or machinery can generate line transients that far exceed the peak value of the applied voltage. If not reduced, these microsecond pulses can disrupt system operation and damage the printer.
- It is recommended to include overvoltage (OVP) and transient protection in the power supply to the printer.
- All electrical noise-generating equipment, such as fans, fluorescent lighting, and air-conditioning systems, should be kept separate from the power source used for your printer.

Grounding

The printer must be connected to a good-quality ground line in order to avoid electrical risk. Please note your obligation to comply with the Electrical Code requirements of the local jurisdiction of the country where the equipment is installed.

The following grounding tasks must be fulfilled to meet the site preparation requirements:

- Grounding wires must be insulated and at least equal in size to the phase conductors.
- Ground impedance must be less than 0.5 Ω or comply with the Electrical Code requirements of the local jurisdiction of the country where the equipment is installed.

3 Site preparation checklist

Safety requirements	Yes	No	Comments
Do those who will operate the equipment have the technical training and experience necessary to be aware of hazards to which they may be exposed in performing a task, and to take appropriate measures to minimize the risks?			(Required)
Is there an emergency exit in the print production area, with easy access and free from any obstruction?			

Electrical installation requirements	Yes	No	Comments
Is the electrician aware of all requirements and specifications highlighted in this guide?			(Required)
Is the single-phase line voltage inside the specified voltage range 200-240 V +-10%?			(Required) Specify nominal mains voltage:
Are there the dedicated lines to connect the power cords, if required? NOTE: Do not use a power strip (relocatable power tap) to connect both power cords.			(Required)
Have branch circuit breakers (2 poles, 16 A/20 A general) been correctly installed for each dedicated line?			(Required)
Have the Residual Current Circuit Breaker (also known as Ground Fault Circuit Interrupter) (2 poles, 30 mA residual, at least 20A capacity) been correctly installed if required or recommended?			(Required)
Is the Power Distribution Unit (PDU) correctly installed?			(Required)
Are the grounding conductors properly installed for each wall receptacle (wall socket)?			(Required)
Are the wall receptacles (wall sockets) suitable for the power cord plug type provided by HP?			(Required)
Are the wall receptacles (wall sockets) and electrical installation suitable for the equipment's rated current ? NOTE: See Table 2-4 for specific information.			(Required)
Are the wall receptacles (wall sockets) placed close enough to the equipment that the plugs can be plugged and unplugged easily? NOTE: See Table 2-6 and 2-7 for specific information.			(Required)

Electrical configuration requirements	Yes	No	Comments
Do you need an Uninterrupted Power Supply (UPS) or step-up transformer? If so, is it correctly installed?			

Networking and computer requirements	Yes	No	Comments
Is the RIP computer and software ready for installation?			
Have network connections been supplied?			
Do you need a web proxy? If so, write down proxy server name and port.			
Do you have a color sensor that is compatible with your RIP?			
Do you have a LAN cable long enough to connect the printer to the network?			

Environmental requirements	Yes	No	Comments
Have the temperature and humidity requirements been satisfactorily met in the print production area, and is there adequate ventilation or air conditioning?			
Have the temperature and humidity requirements been satisfactorily met in the storage area?			
Is the print production area free from dirt and dust?			
Does the print production area have sufficient lighting?			
Does the printing room meet HP recommended minimal ventilation?			(Required)

Other requirements	Yes	No	Comments
Have you arranged for supplies such as substrate and ink cartridges to be available on the day of installation?			
Have you met the requirements specified in this guide?			(Required)

Date of site preparation completion
Site preparation guide edition number or copyright date
Customer signature